Chao sensor

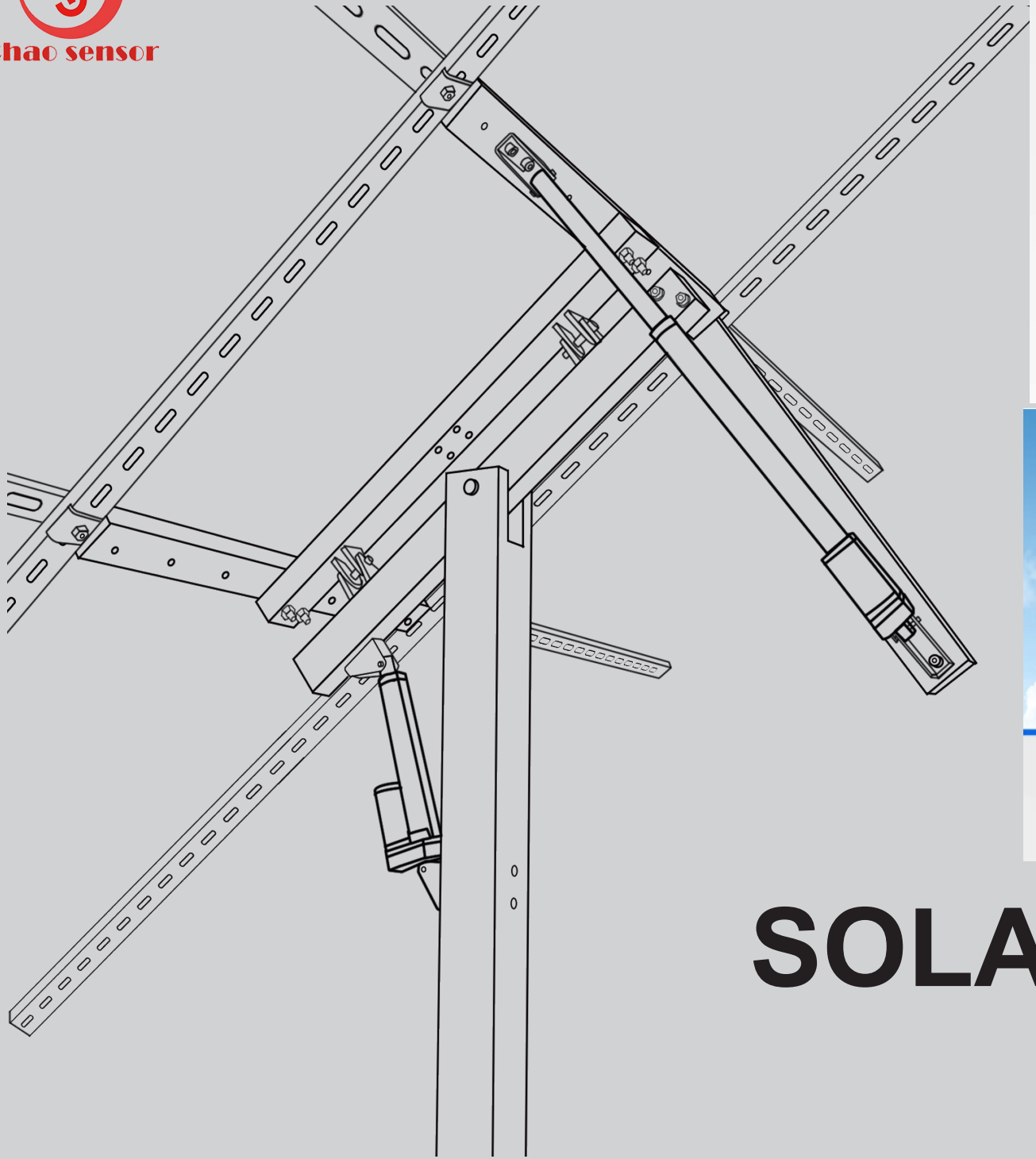

SOLAR TRACKER

Manual

SAFETY PRECAUTIONS

PLEASE READ CAREFULLY BEFORE PROCEEDING

· For the proper use and maintenance of this product, please read carefully and understand this instruction before installation.

· Make sure that the tracker system is installed on a solid concrete ground which is strong enough to hold the weight of all the tracker and solar panels.

· Make sure all the bolts and nuts are firmly tightened during the installation.

· To adjust the angle of the solar panels, loosen the side clamps and middle clamps first and then move the panels carefully. **DO NOT** adjust the solar panels by force.

· During long-time usage, some components might be loosened or corroded. For safety, please check the tracker regularly.

WHAT'S IN THE BOX

x1
Main Pole

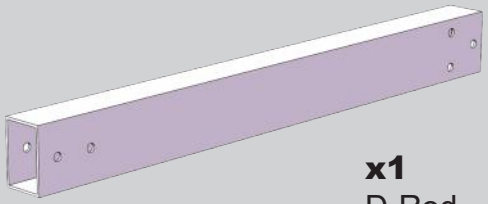

x1
D-Rod

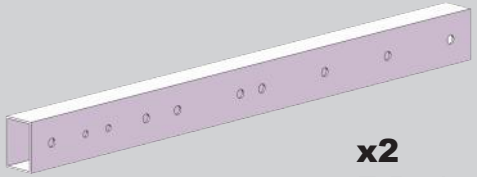

x2
E-Rod

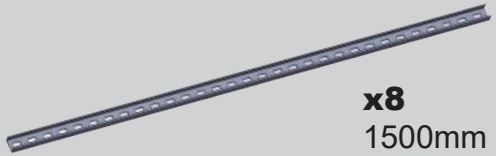

x8
1500mm
Channel Steel

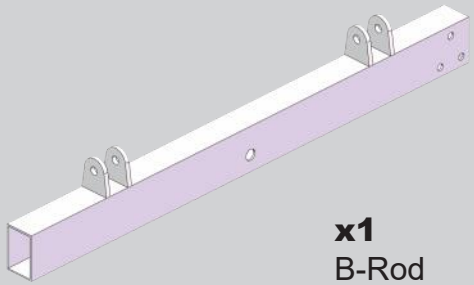

x1
B-Rod

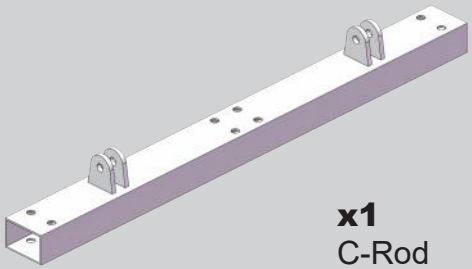

x1
C-Rod

x1
300mm
Linear Actuator

x1
150mm
Linear Actuator

x1
Wind Speed
Sensor

x1
Sunlight
Sensor

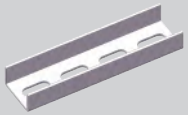

x2
U-Shaped
Connector

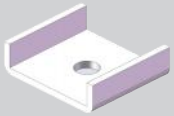

x8
U-Shaped
Locker

x8
Linear Actuator
Stand

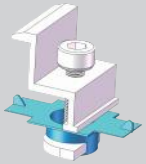

x10
Solar Panel
Side Clamp

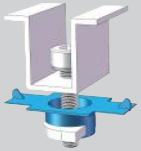

x6
Solar Panel
Middle Clamp

x1
Sunlight sensor
Stand

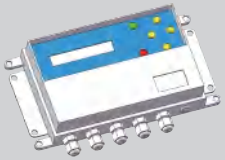

x1
Solar Tracker
Controller

x8
M8*20
Socket Cap

x8
M10*20
Socket Cap

x16
M10*60
Socket Cap

x4
M10*100
Socket Cap

x1
M14*110
Socket Cap

x2
M6*12
Hex Cap

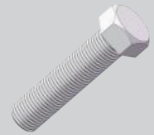

x1
M10*40
Hex Cap

x3
M10*90
Hex Cap

x4
M4*16
Hex Cap

x8
Expansion
Bolt

x4
Latch

x2
Flange Nut

x34
Hex Nut

x62
Washer

x34
Elastic
Washer

For the convenience of display, some of the bolts would be shown as a simplified figure. Please refer to the material box on the top of every step.

1

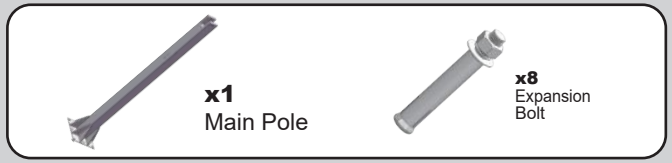

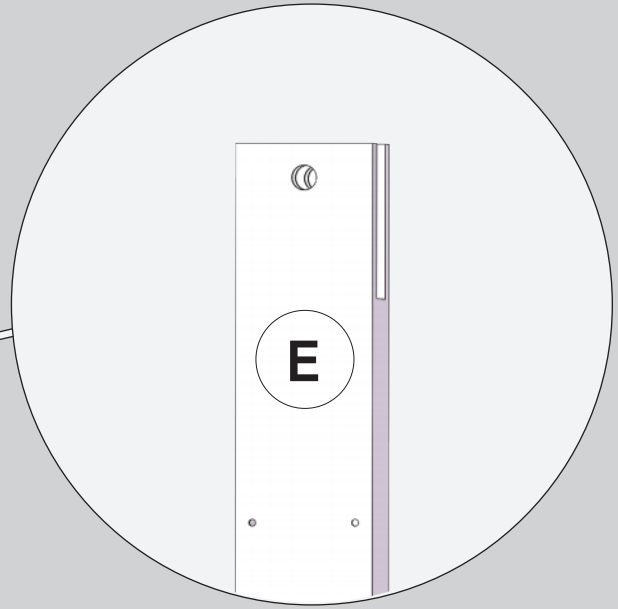

There are 4 signs (S,N,W,E) on the main pole to indicate the installation direction. Place the main pole corectly so that the the tracker can track the sun properly.

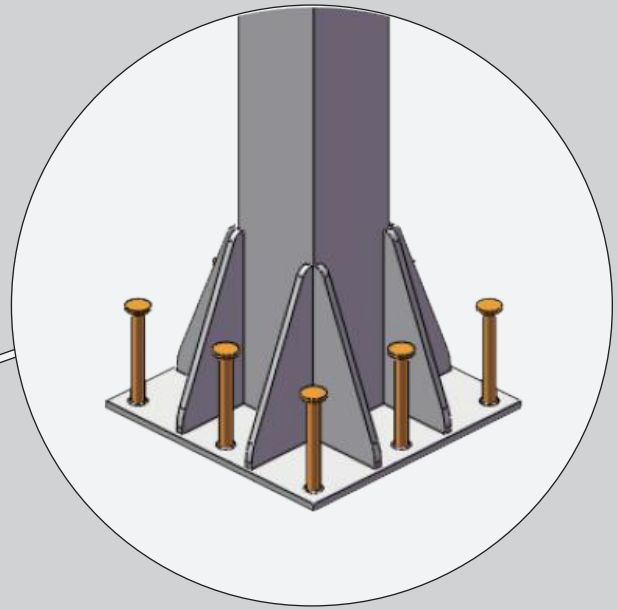

The main pole must be installed on solid concrete ground or pier with the expansion bolts.

2

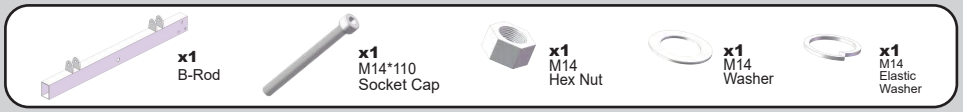
x1
B-Rod
x1
M14*110
Socket Cap
x1
M14
Hex Nut
x1
M14
Washer
x1
M14
Elastic
Washer

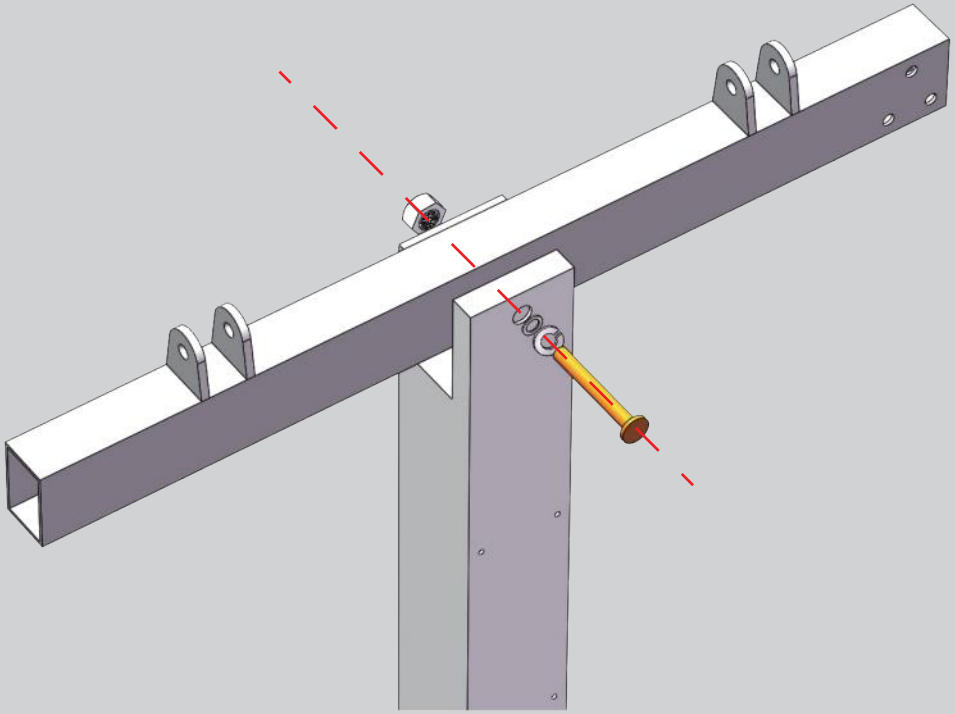

3

x1
C-Rod
x2
Latch

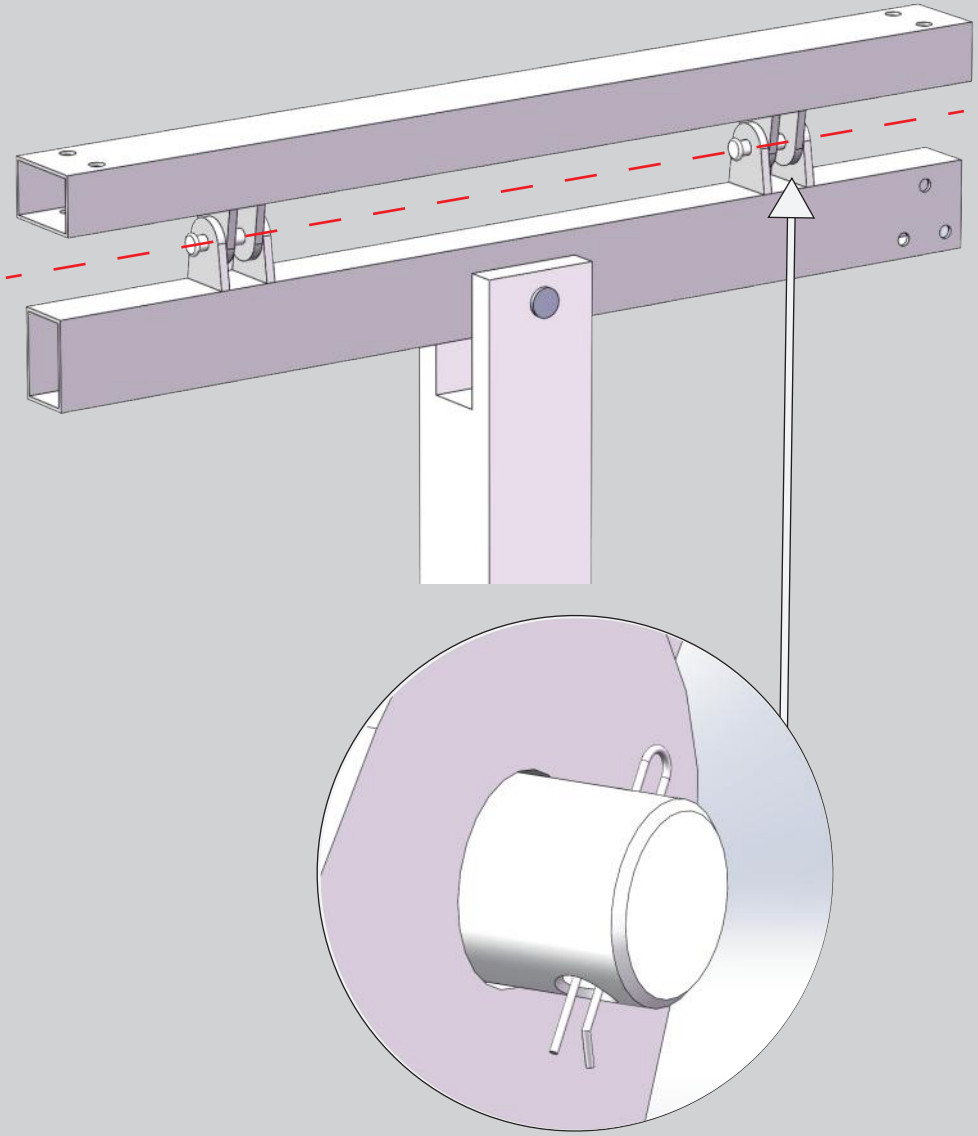

4

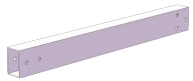

x1
D-Rod

x3
M10*90
Hex Cap

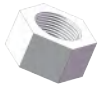

x3
M10
Nut

x3
M10
Washer

x3
Elastic
Washer

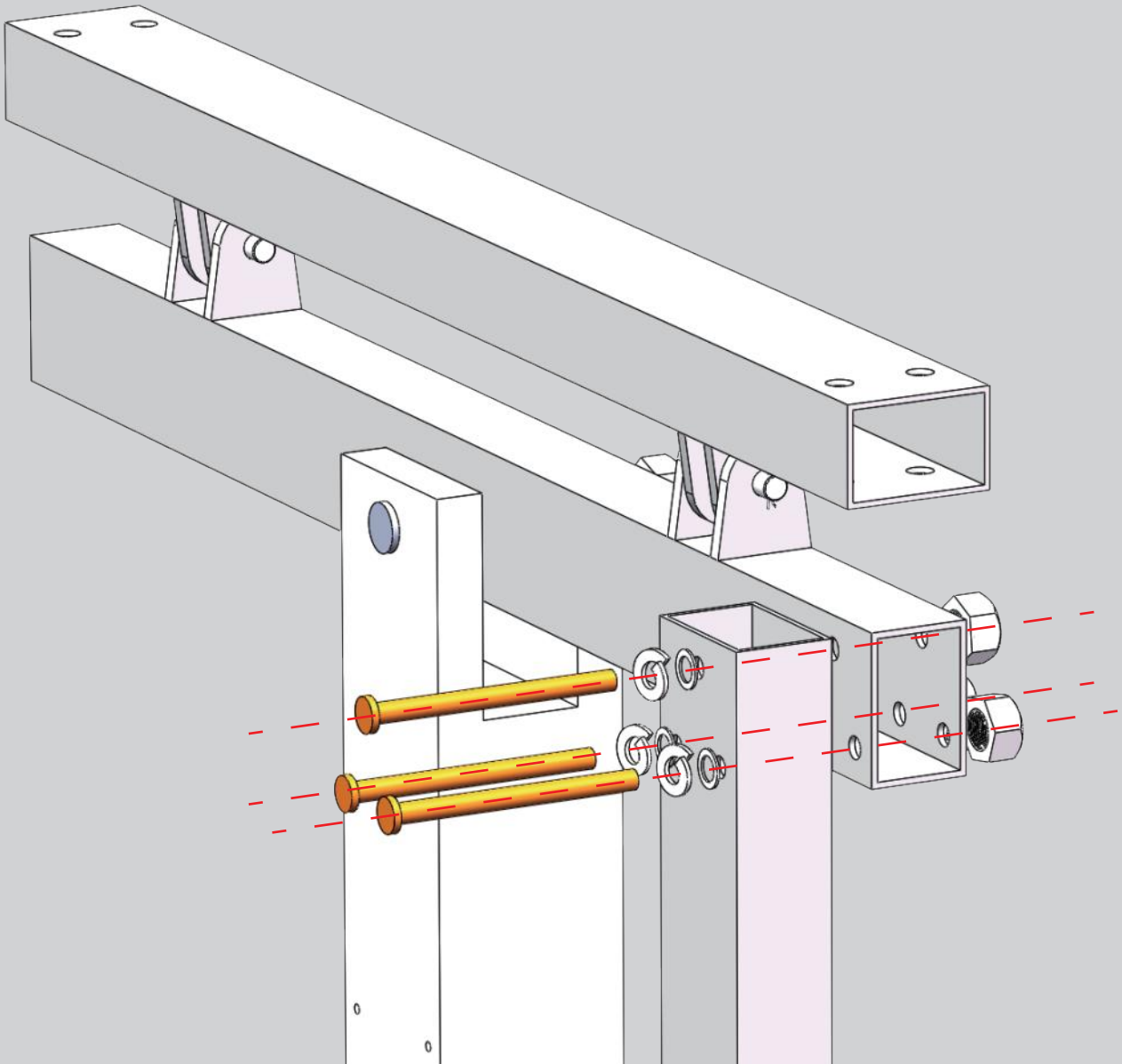

5

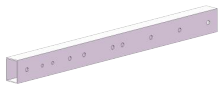

x2
E-Rod

x4
1500mm
Channel Steel

x16
M10*100
Socket Cap

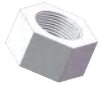

x16
M10
Hex Nut

x16
M10
Washer

x16
Elastic
Washer

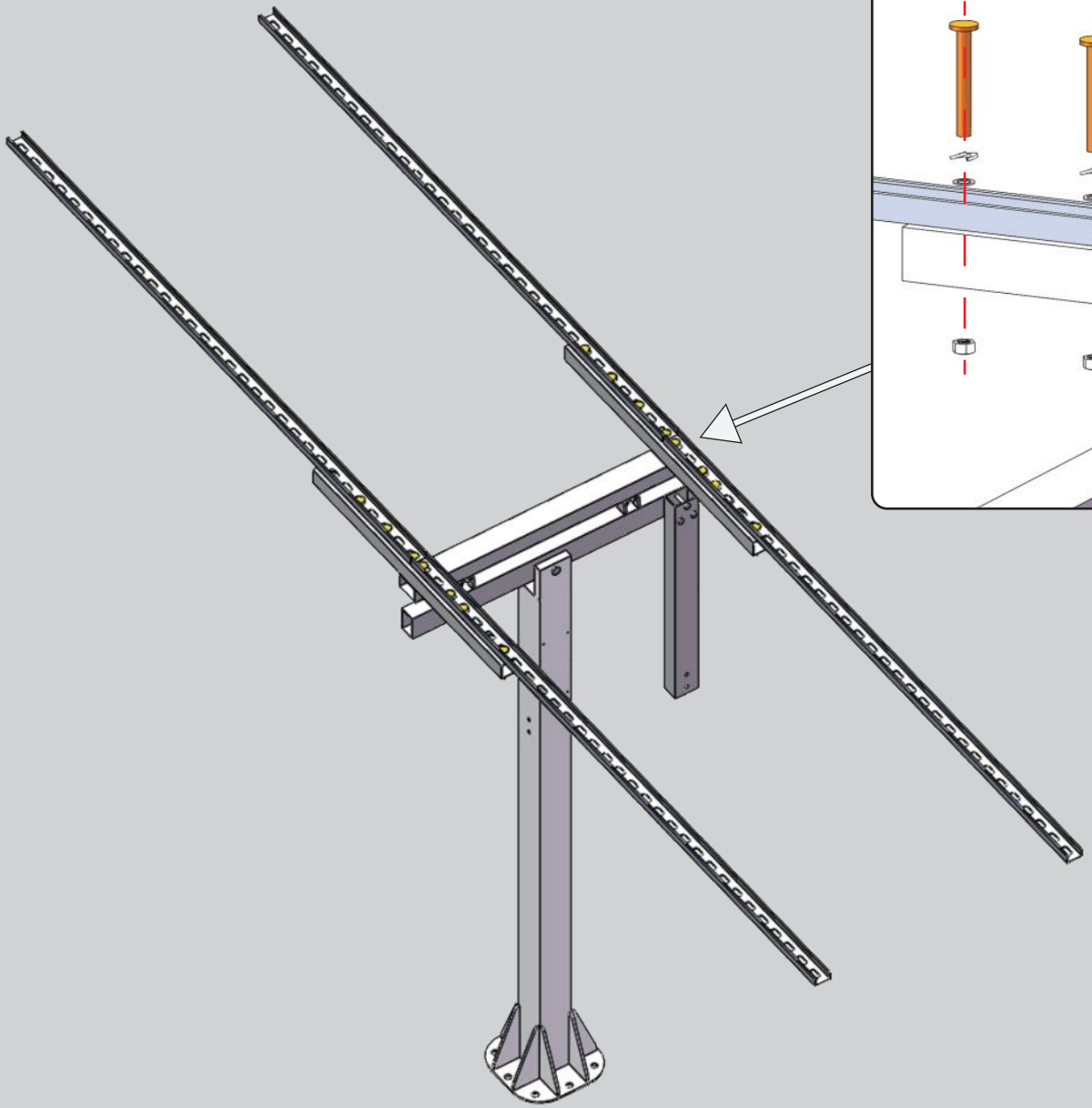

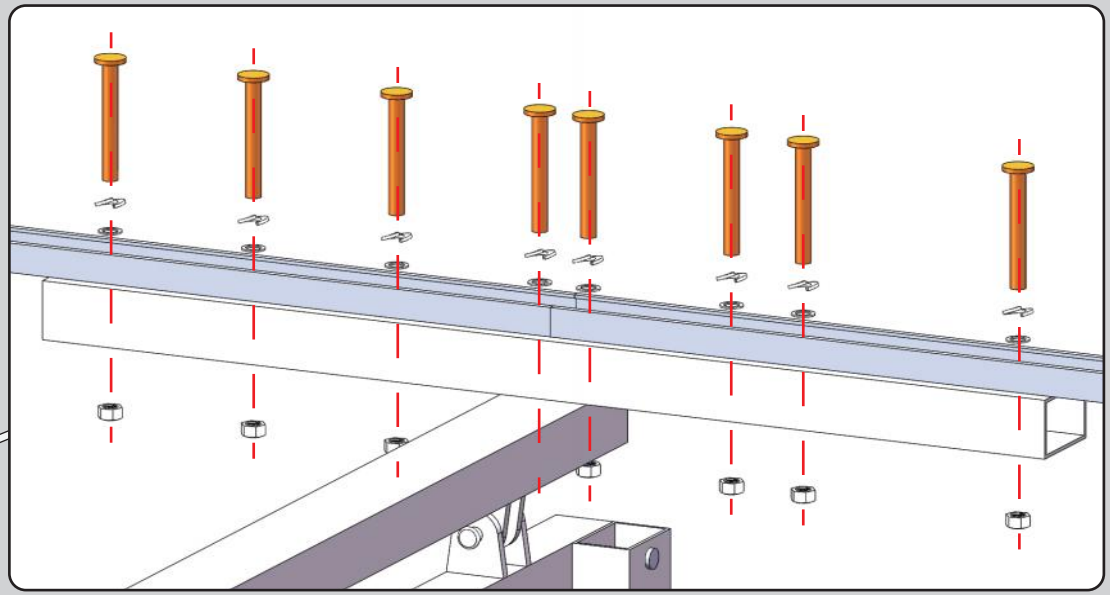

6

x1
150mm
Linear Actuator

x2
Linear Actuator
Stand

x4
M8*20
Socket Cap

x2
Latch

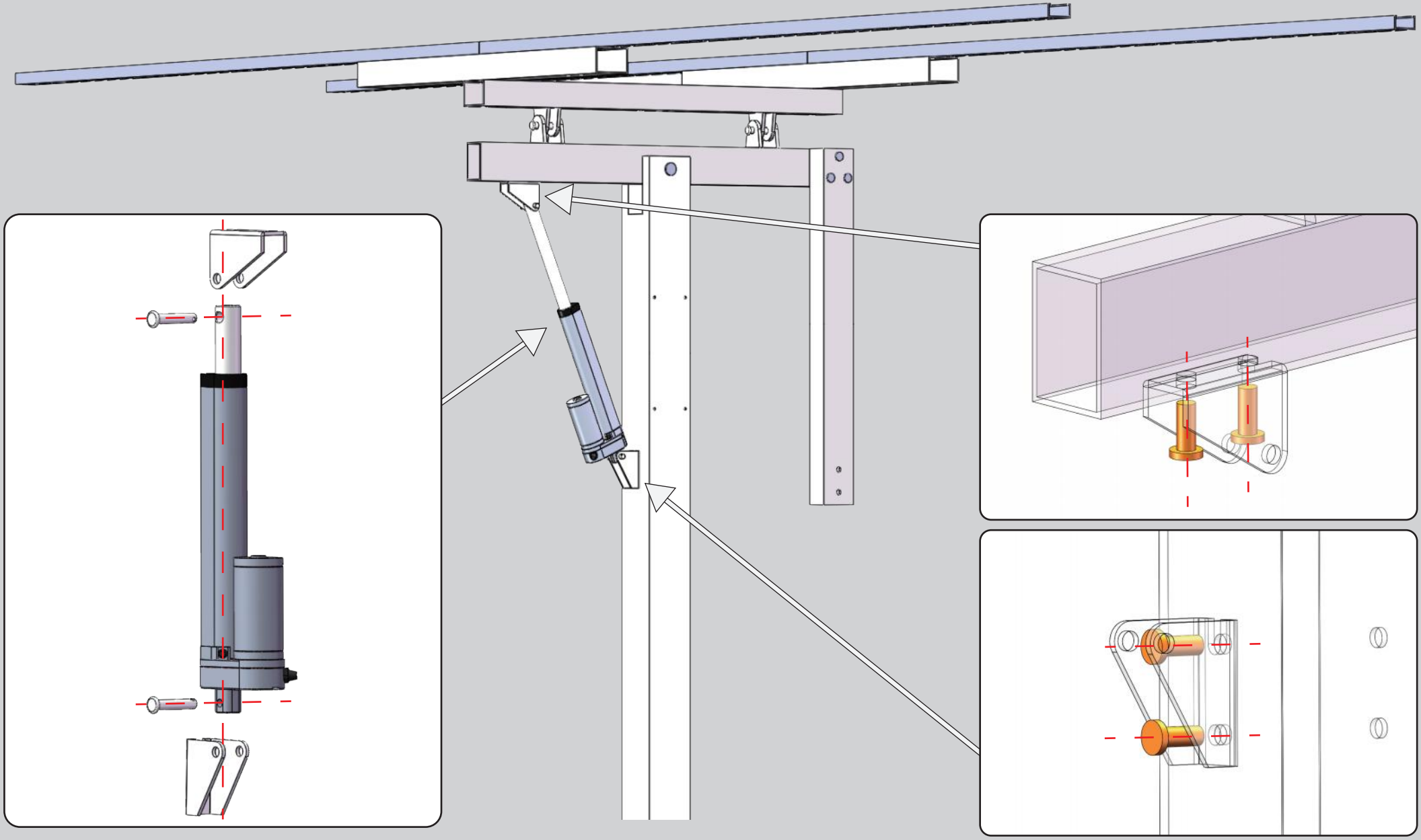

7

x1
300mm
Linear Actuator

x2
Linear Actuator
Stand

x4
M8*20
Socket Cap

x2
Latch

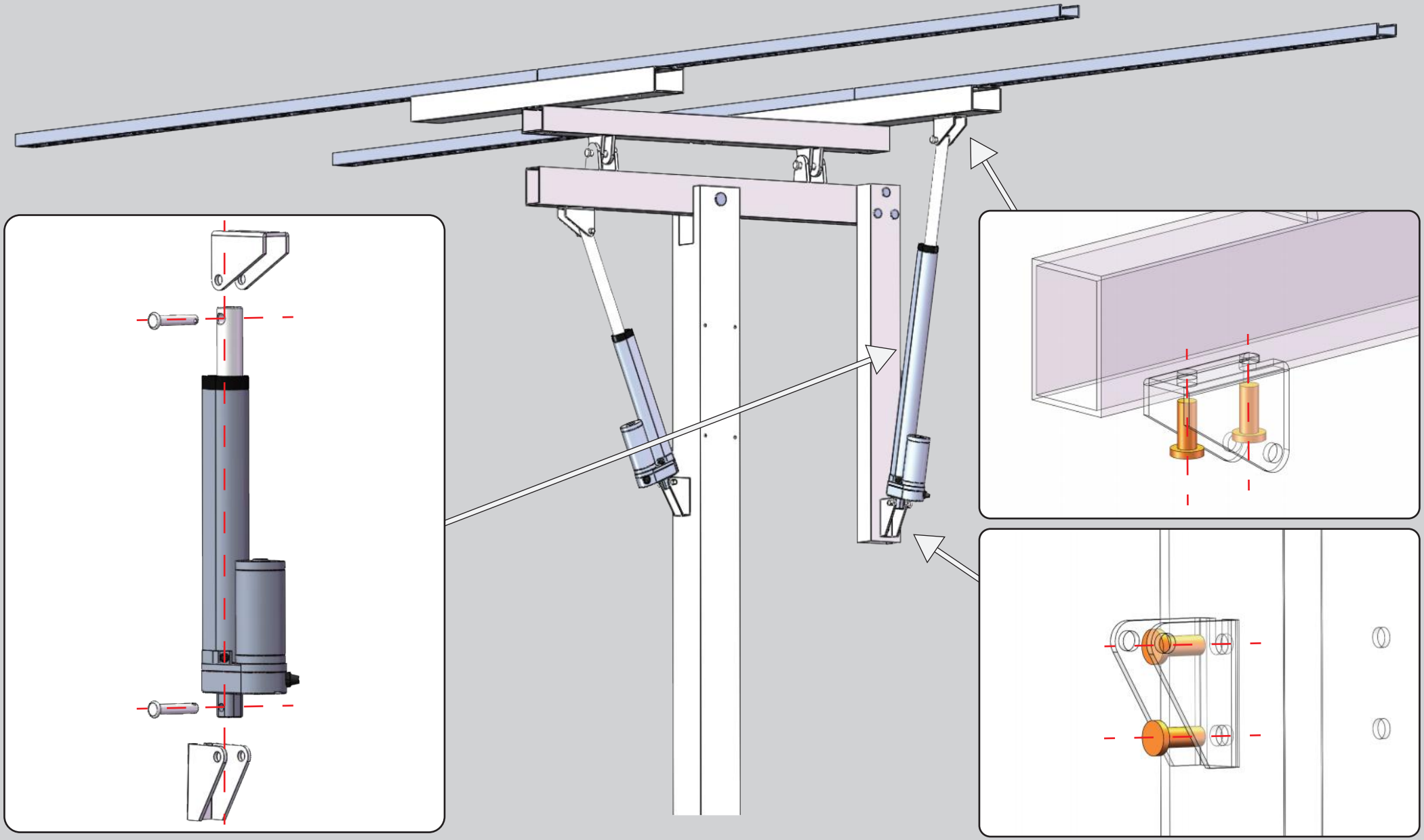

8

x4
1500mm
Channel Steel

x2
U-Shaped
Connector

x8
U-Shaped
Locker

x4
M10*20
Socket Cap

x8
M10*20
Socket Cap

x4
M10
Hex Nut

x8
M10
Flange Nut

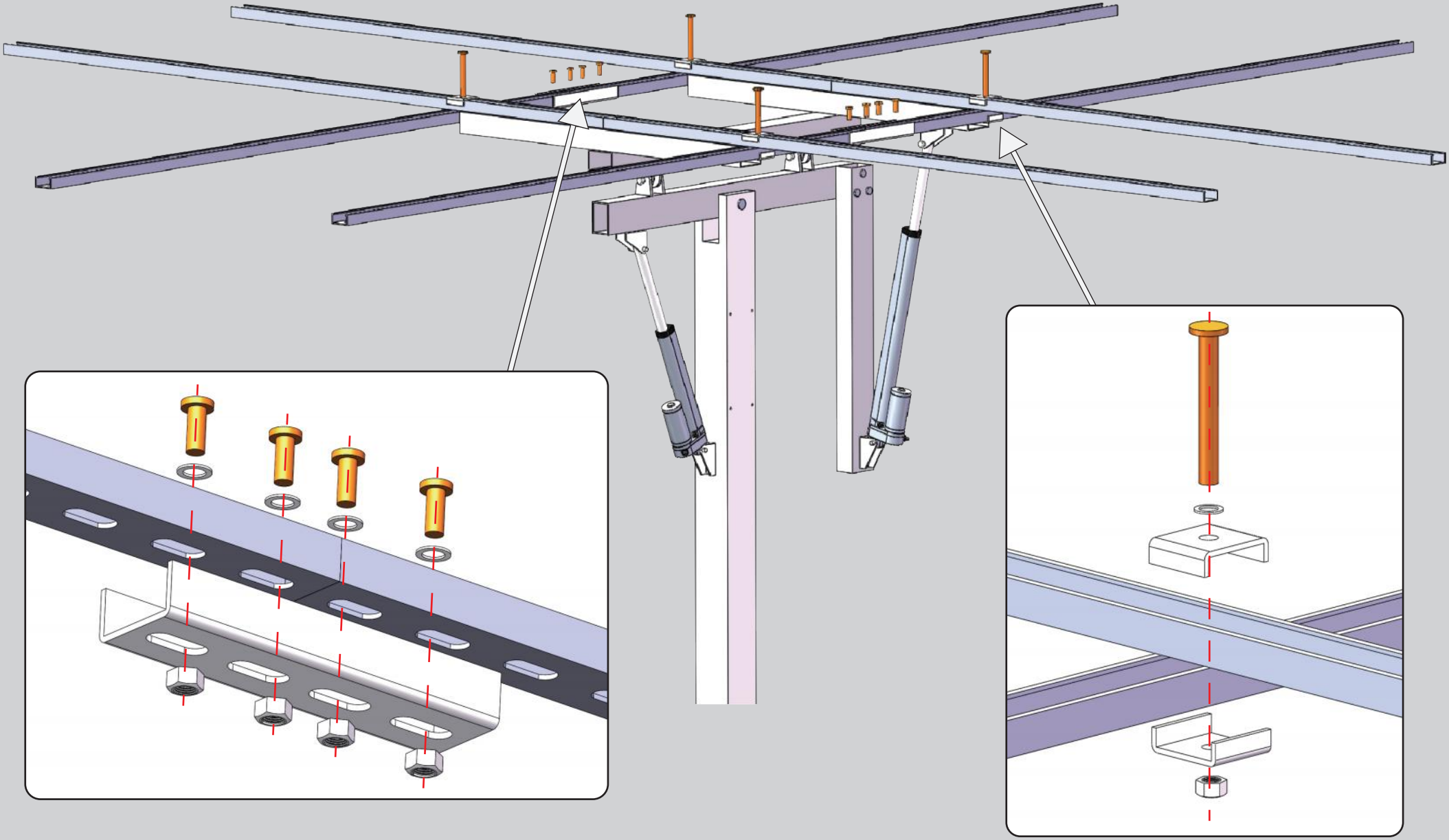

9

x10
Solar Panel
Side Clamp

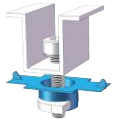

x6
Solar Panel
Middle Clamp

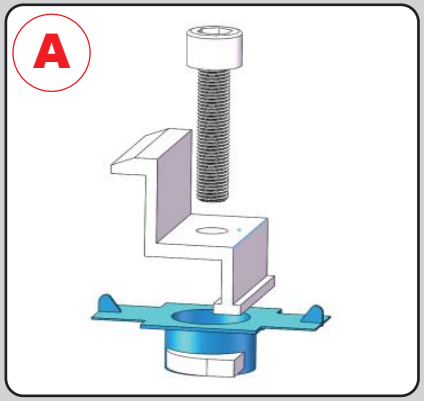

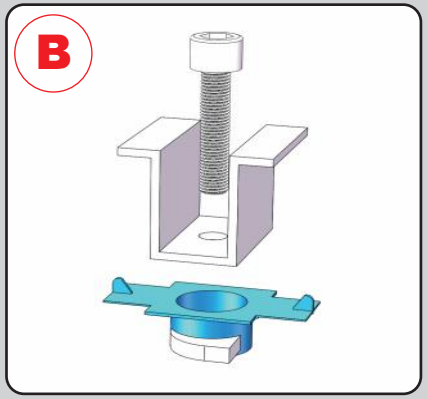

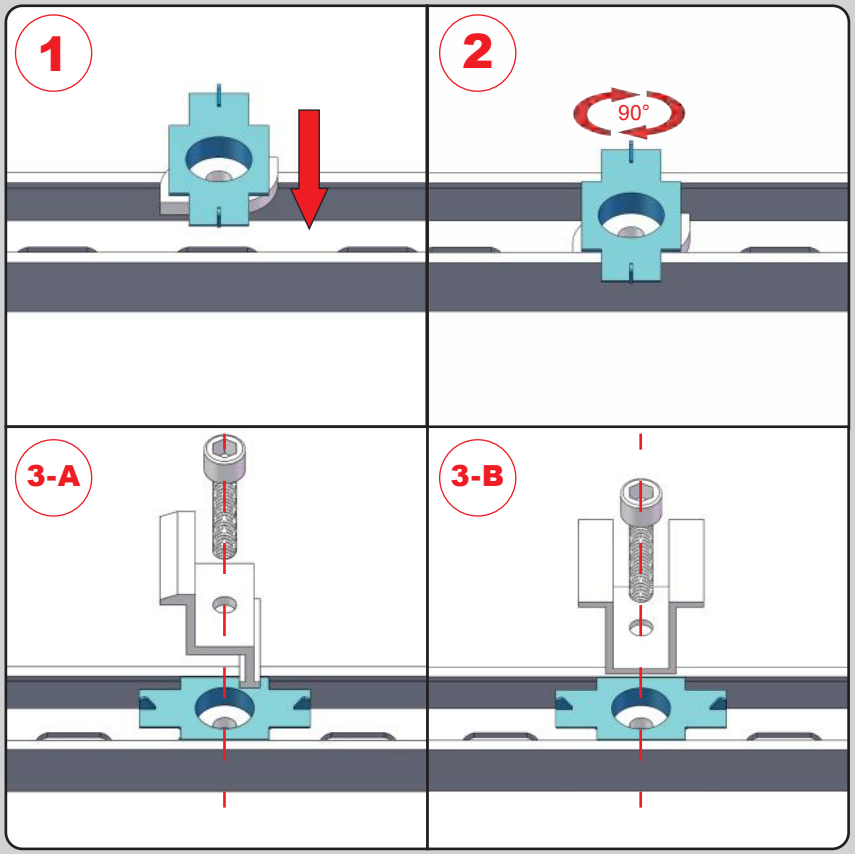

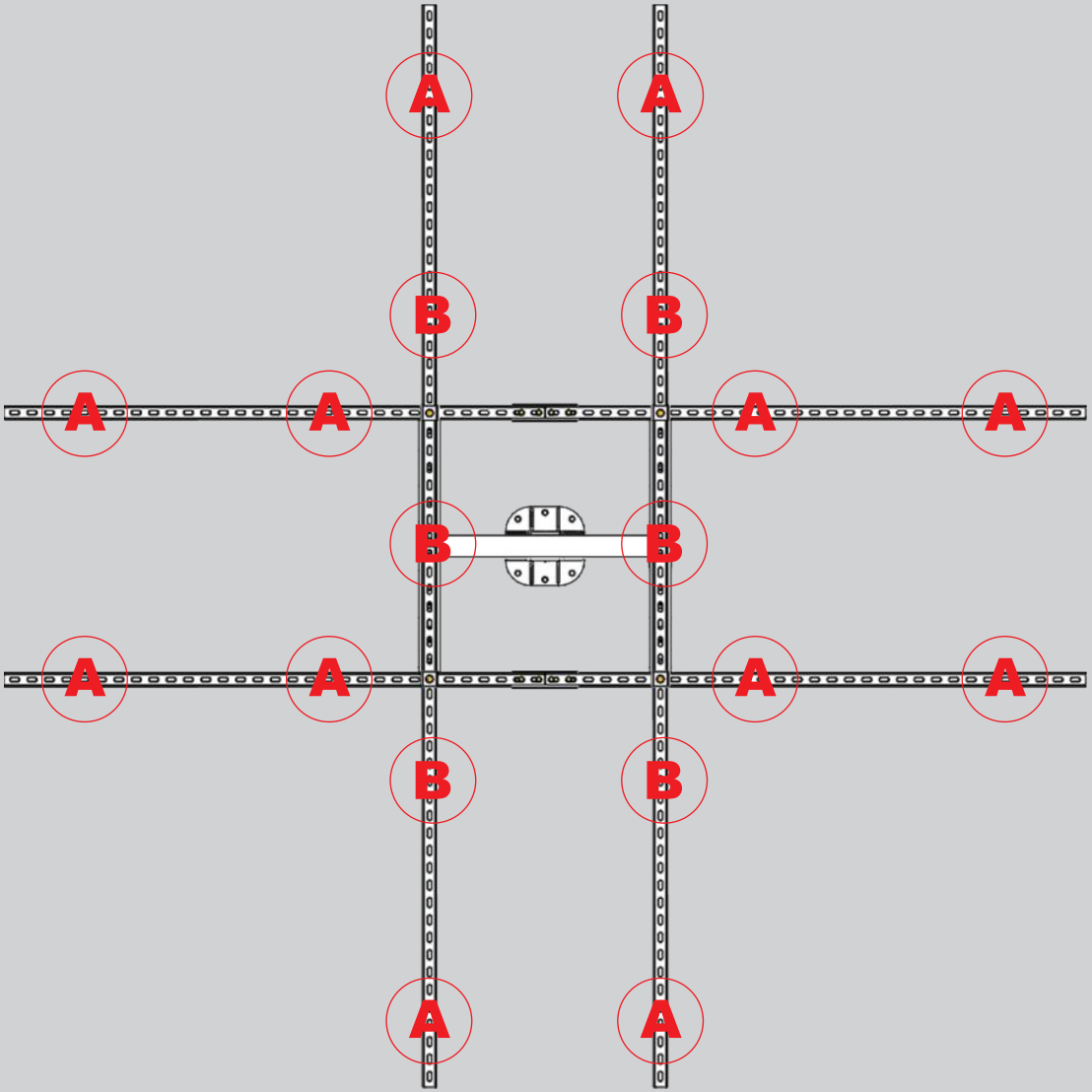

10

x1
Sunlight
Sensor

x1
Sunlight sensor
Stand

x2
M6*12
Hex Cap

x1
M10*40
Hex Cap

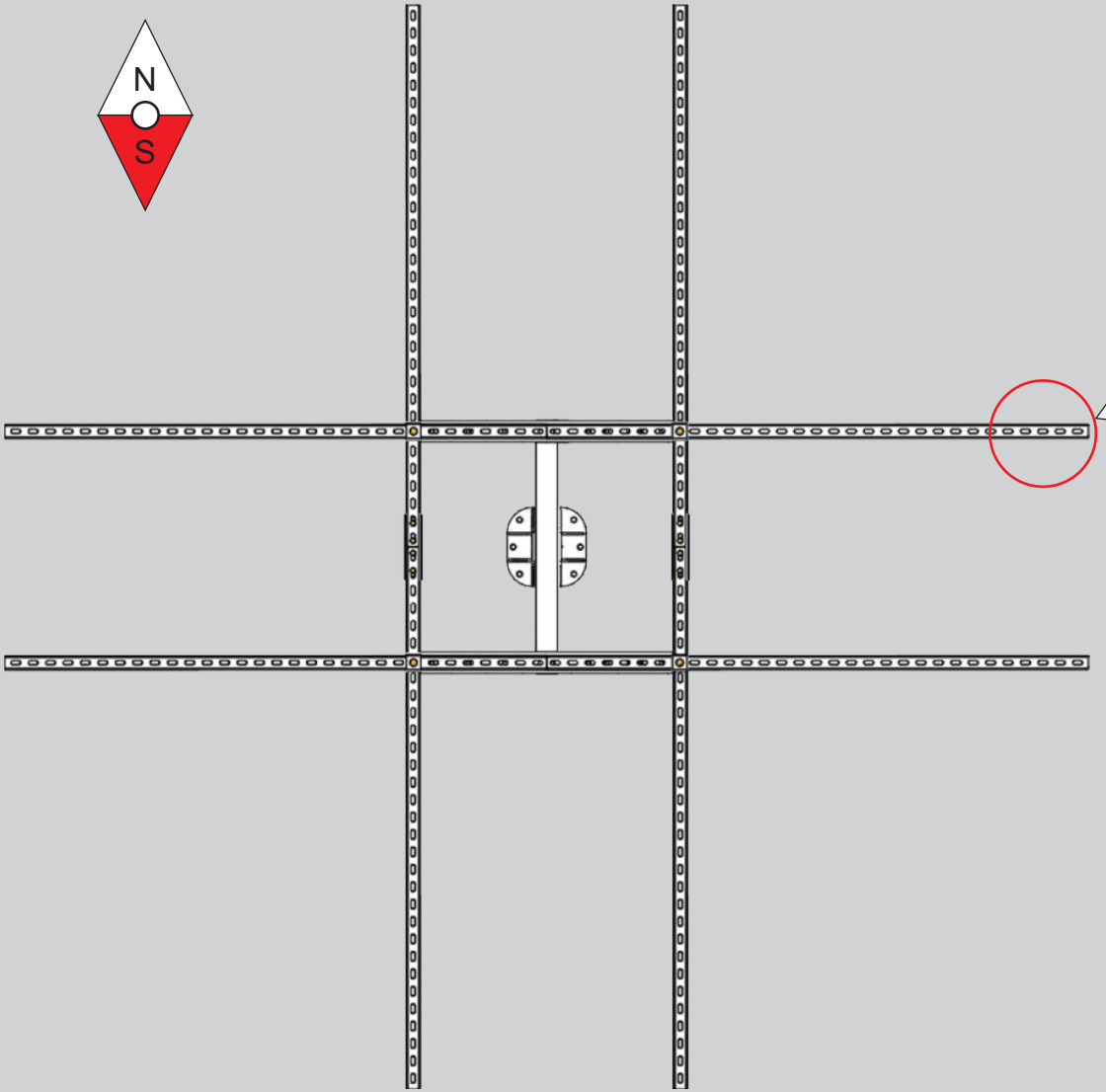

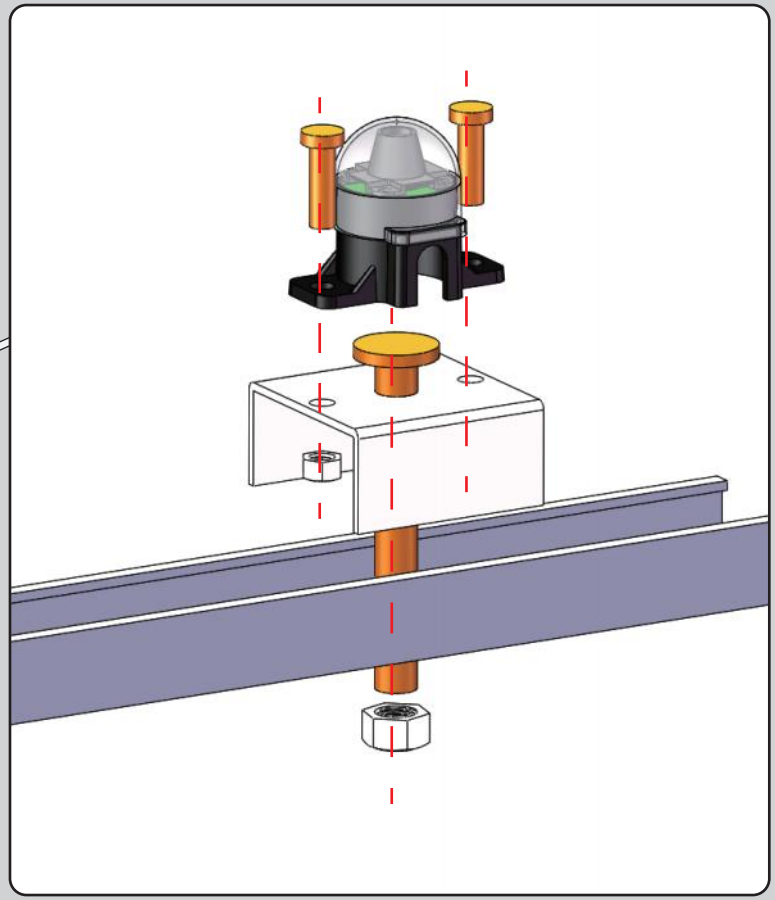

11

x1
Solar Tracker
Controller

x4
M4*16
Hex Cap

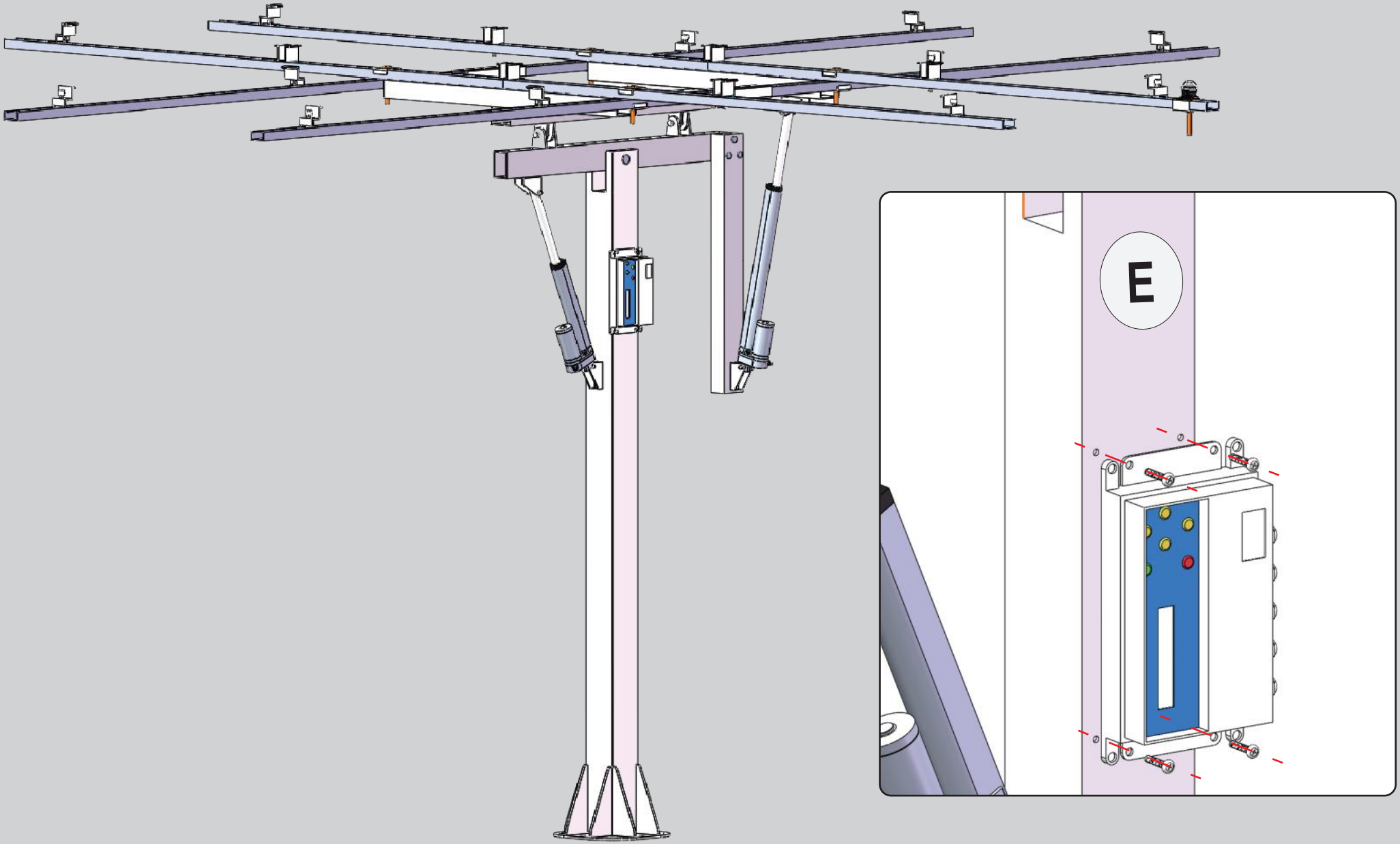

12

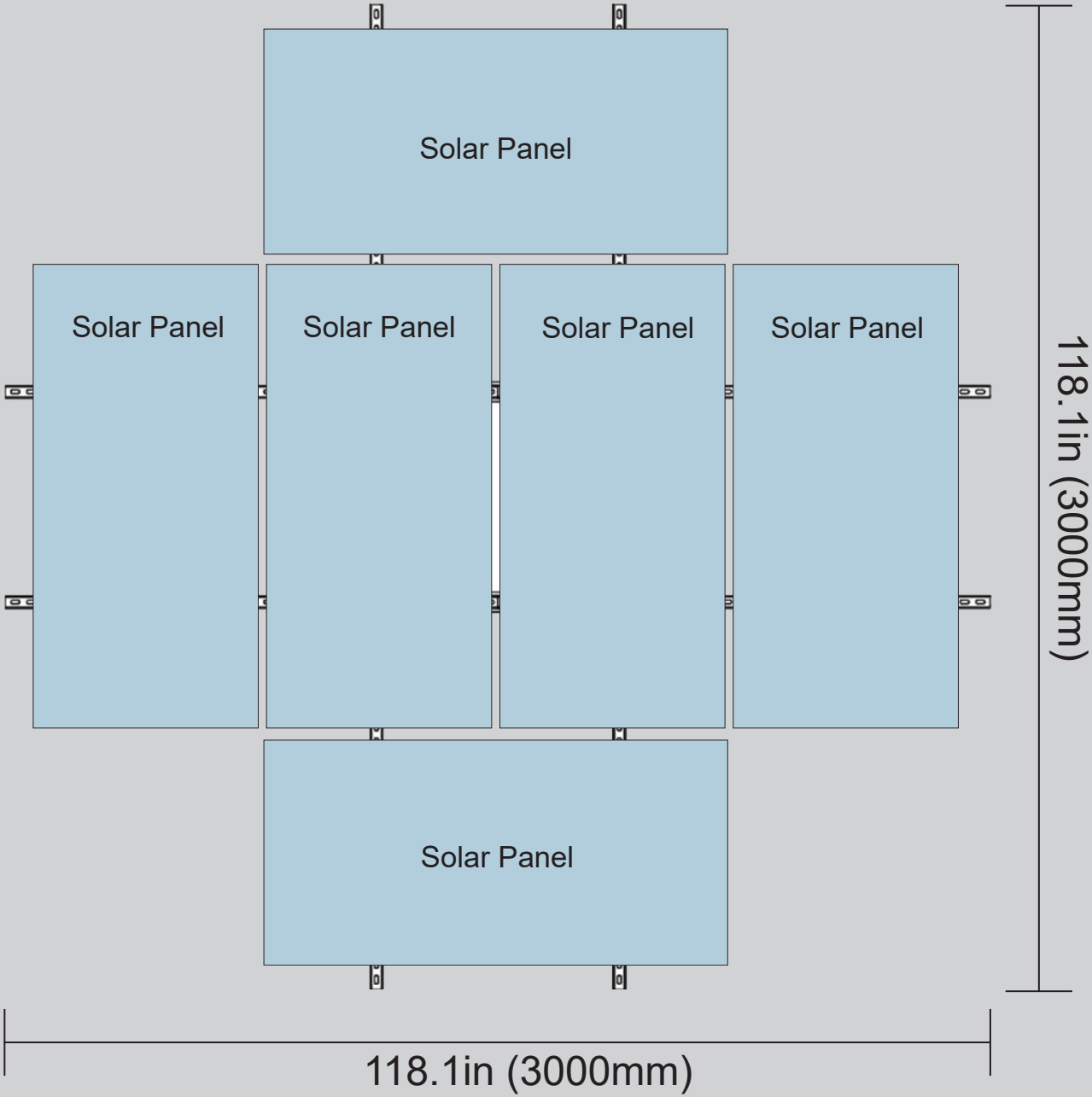
Solar Panel
Solar Panel
Solar Panel
Solar Panel
Solar Panel
Solar Panel
118.1in (3000mm)
118.1in (3000mm)

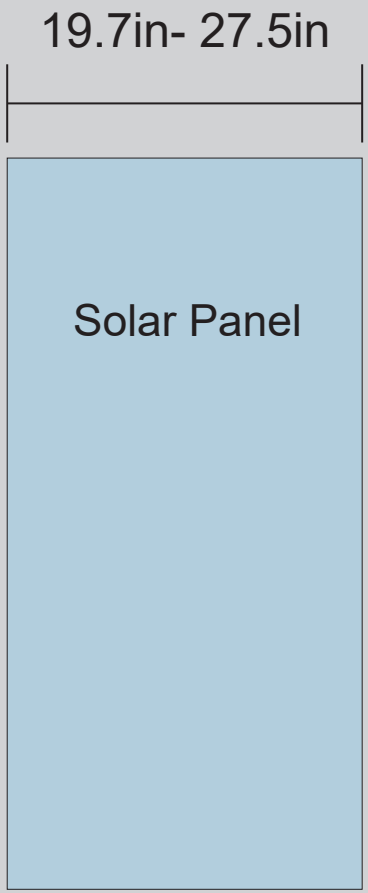
19.7in- 27.5in
Solar Panel